NOTE #1 - All units – Laminate to be Formica 8839-58 Ashen Ribbonwood INSTALLED – VERTICALLY

Move Controls to operator Right Side – furnish a 6-20P if possible to match existing outlet – change to 1000 watt elements if needed.

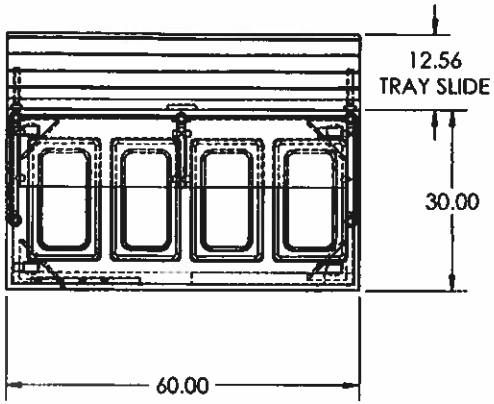

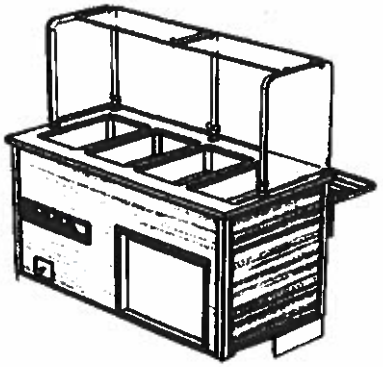

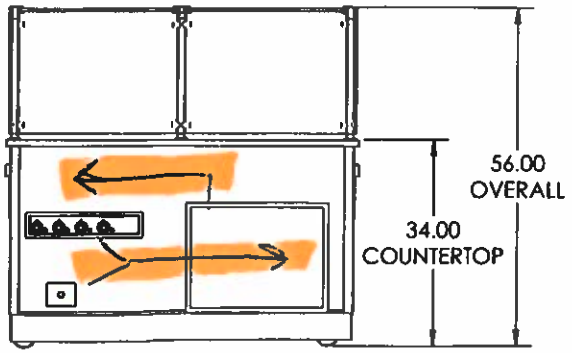

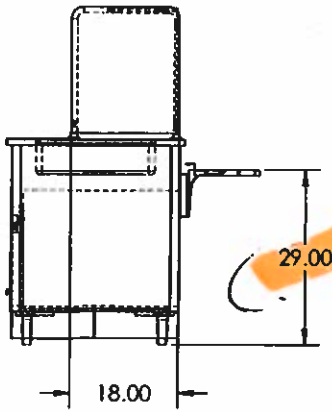

~30"

Change to 6-20P

EQUIPMENT 1	EQUIPMENT 2	EQUIPMENT 3	UNIT VOLTS	UNIT AMPS	UNIT PLUG	BASE FINISH	BASE COLOR
HOT_STEAM	NONE	NONE	208	12	NEMA 6-15P	CUSTOM LAMINATE	

© 2020 The V

Supply an extended drain hose with " L" pipe at end to access floor sink – 8' away

NOTE #2 - All Units supply 3-sided skirting – securely attached to the units – as they will be moved on a daily basis

~ No Rear Skirting

VOLLRATH

1236 N. 18th Street
Sheboygan, WI 53081
vollrathfoodservice.com

NO.	DESCRIPTION	DATE

Navajo Elem School 2 10

C-12021

2/11/2021

NTS

Robert Tully

VOLLRATH PLAN, FRONT, SIDE

1 of 1

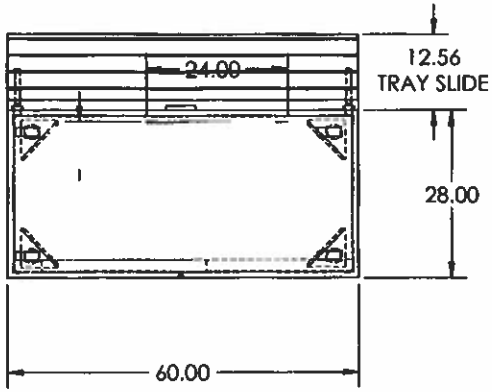

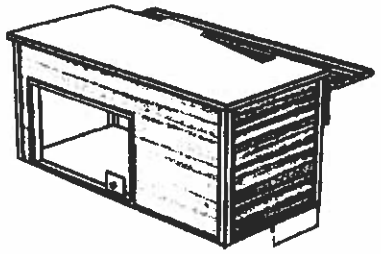

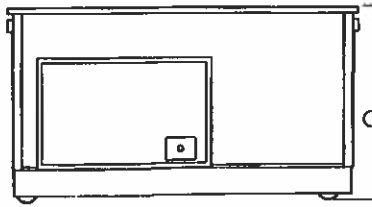

Counter & Tray Slide @ 30"

-30"

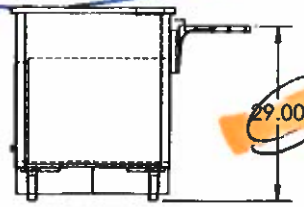

30"

EQUIPMENT 1	EQUIPMENT 2	EQUIPMENT 3	UNIT VOLTS	UNIT AMPS	UNIT PLUG	BASE FINISH	BASE COLOR
UTILITY_SPACE	BEVERAGE	UTILITY_SPACE	NA	0	N/A	CUSTOM LAMINATE	_

REVISIONS

NO.	DESCRIPTION	DATE

Navajo Elem School 2 10

PROJECT NUMBER: C-12021

REFERENCE:

DATE: 2/11/2021

SCALE: NTS

DRAWN BY: Robert Tully

SHEET TITLE: VOLLRATH PLAN, FRONT, SIDE

SHEET NUMBER: 1 of 1

© 2020 The Vollrath Company, L.L.C. All Rights Reserved

THIS DOCUMENT WAS ORIGINALLY CREATED ON A 11" x 17" SIZE SHEET

See NOTE #1

See NOTE #2

Furnish Single Side Speed Serve with LED Light
Match previous unit supplied on Hopi Elem School 11/18

(shown in Next Drawing)

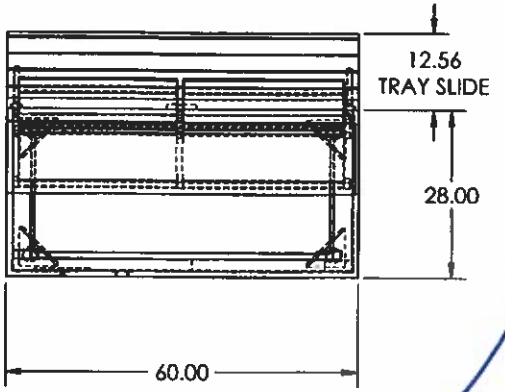

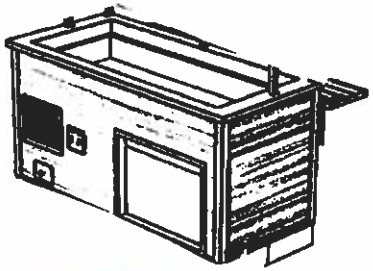

Counter & Tray Slide @ 30"

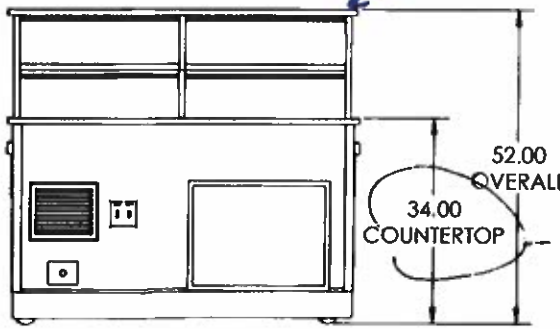

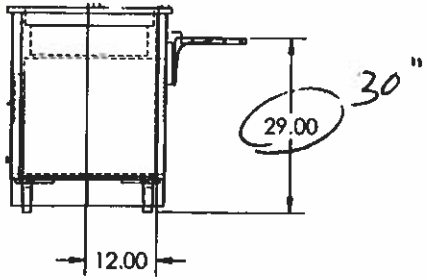

EQUIPMENT 1	EQUIPMENT 2	EQUIPMENT 3	UNIT VOLTS	UNIT AMPS	UNIT PLUG	BASE FINISH	BASE COLOR
COLD_NSF7	NONE	NONE	120	8.8	NEMA 5-15P	CUSTOM LAMINATE	

© 2020 The Vollrath Company, L.L.C. All Rights Reserved

THIS DOCUMENT WAS ORIGINALLY CREATED ON A 11" x 17" SIZE SHEET

REVISIONS

NO.	DESCRIPTION	DATE

Navajo Elem School
2 10

C-12021

2/11/2021

NTS

Robert Tully

VOLLRATH
PLAN, FRONT, SIDE

1 of 1

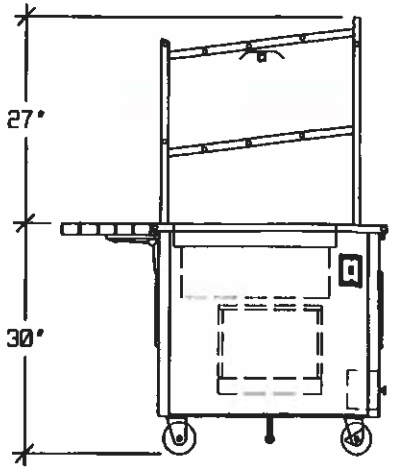

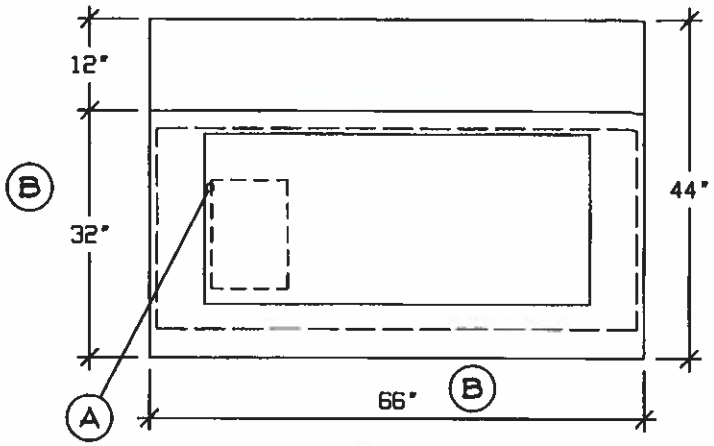

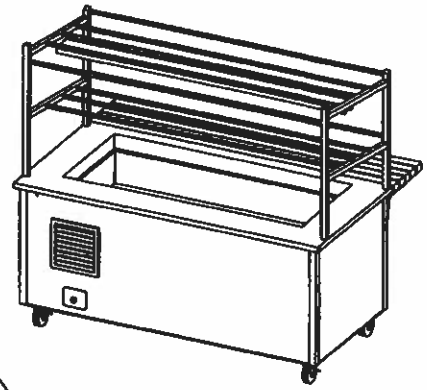

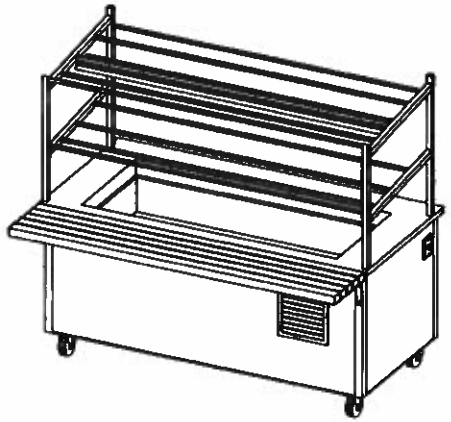

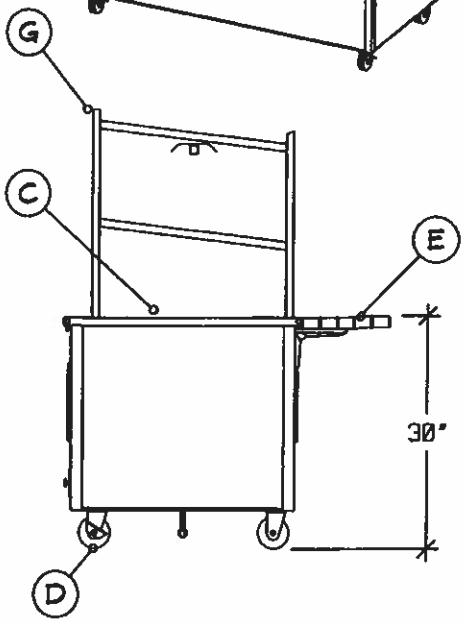

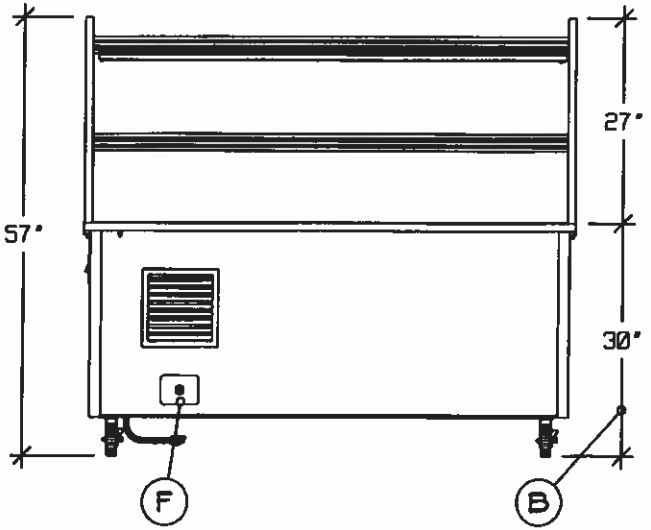

SERVER 36 | QTY 1
COLD FOOD COUNTER
A (1) 4 PAN NSF7 COLD WELL
B CUSTOM COUNTER WIDTH, DEPTH & HEIGHT
C LINE UP LOCKS
D 4" CASTERS (2) W/BRAKES
E CUSTOMER SIDE V RIB TRAY SLIDE W/LIFT-OFF BRACKETS, CONTINUOUS SURFACE HEIGHT
F (1) 1\2" DRAIN WITH BALL VALVE
G OVERSHELF BREATH GUARD

SPEED SERVE
FULL WIDTH S-S
LED LIGHT STRIP
ON BOARD SWITCH
*** SINGLE SIDE ACESS

Finishes And Materials

Top	** 14 Ga SST
Body	Laminate TBD
Trim	18 Ga SST
Tray Rail	** 14 Ga SST
Breath Grd	Polished SST

VOLTS	120	ELECTRICAL
ø	1	NEMA 5-15
	7.2A	

PLUMBING CW: -
HW: -
WASTE: (1) Ø.5" INDIRECT

HOPIE

HOPI ELEMENTARY SCHOOL

VOLLRATH
THE VOLLRATH CO., LLC

10-11-18

COPYRIGHT 2018
SHEBOYGAN, WI

See NOTE #1

See NOTE #2

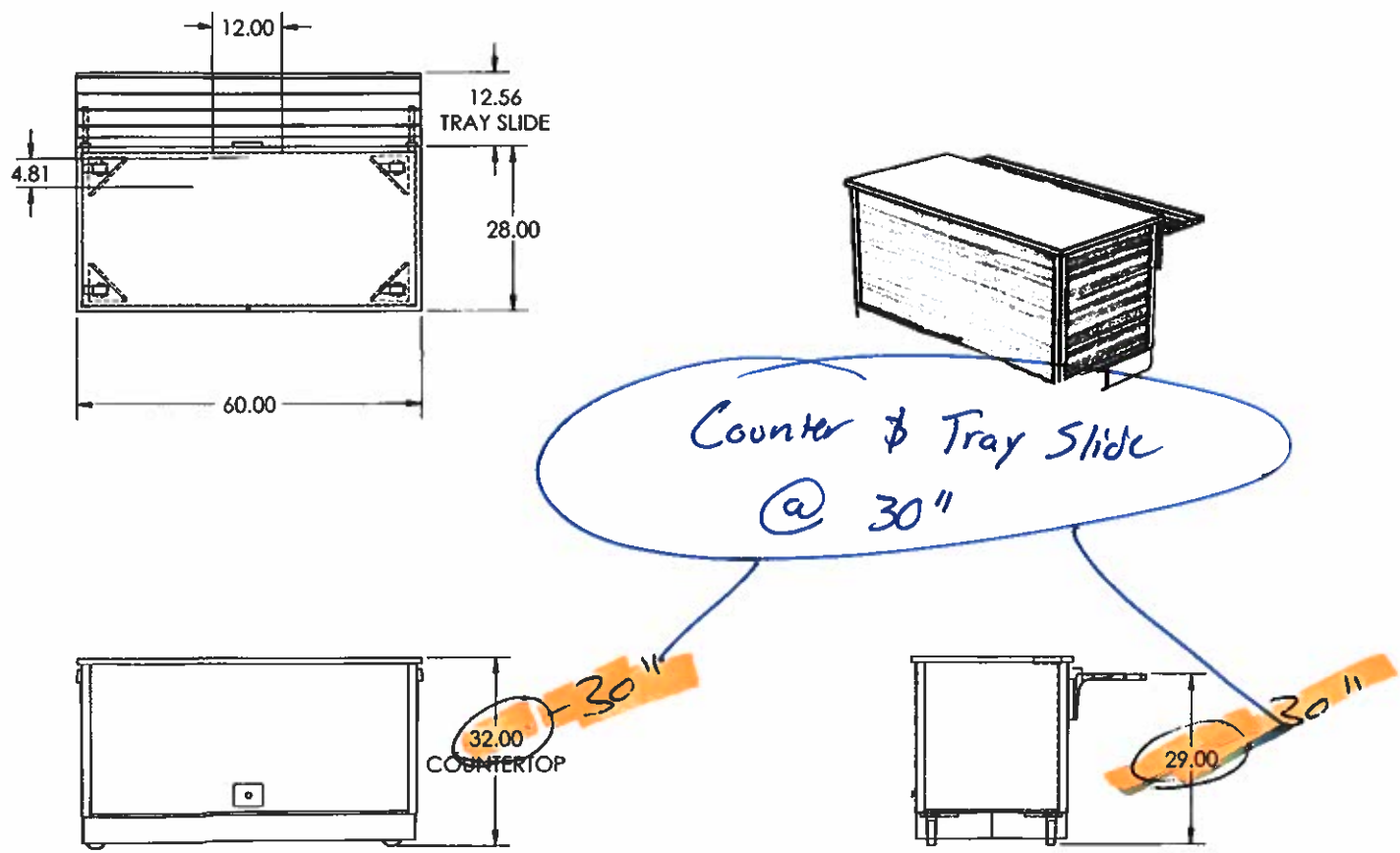

EQUIPMENT 1	EQUIPMENT 2	EQUIPMENT 3	UNIT VOLTS	UNIT AMPS	UNIT PLUG	BASE FINISH	BASE COLOR
UTILITY_SPACE	BEVERAGE	UTILITY_SPACE	NA	NA	N/A	CUSTOM LAMINATE	

REVISIONS

DATE	NO.	DESCRIPTION

Robert Tully

PROJECT NUMBER: C-12021

REFERENCE:

DATE: 2/11/2021

SCALE: NTS

DRAWN BY: Robert Tully

SHEET TITLE: VOLLRATH PLAN, FRONT, SIDE

SHEET NUMBER: 1 of 1

© 2020 The Vollrath Company, L.L.C. All Rights Reserved

THIS DOCUMENT WAS ORIGINALLY CREATED ON A 11" x 17" SIZE SHEET

See NOTE #1

See NOTE #2

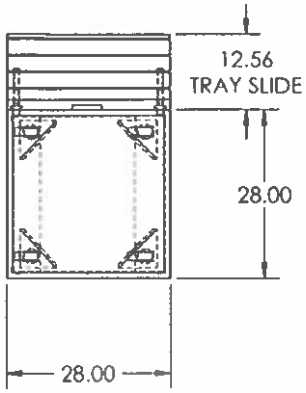

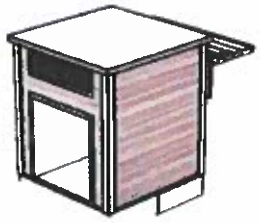

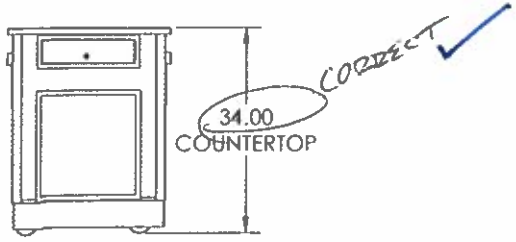

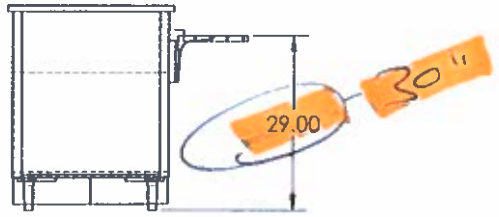

EQUIPMENT 1	EQUIPMENT 2	EQUIPMENT 3	UNIT VOLTS	UNIT AMPS	UNIT PLUG	BASE FINISH	BASE COLOR
CASHIER_OPER	NONE	NONE	120	10	NEMA 5-15P	CUSTOM LAMINATE	

REVISIONS

NO	DESCRIPTION	DATE

Navajo Elem School 2 10

C-12021

2/11/2021

NTS

Robert Tully

VOLLRATH PLAN, FRONT, SIDE

1 of 1

© 2020 The Vollrath Company, L.L.C. All Rights Reserved

THIS DOCUMENT WAS ORIGINALLY CREATED ON A 11" x 17" SIZE SHEET

See NOTE #1

See NOTE #2

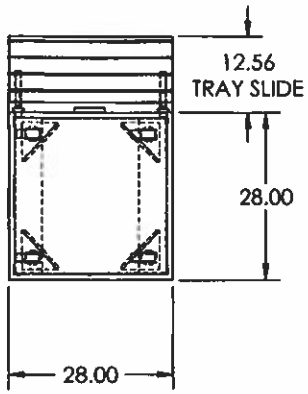

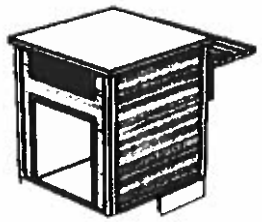

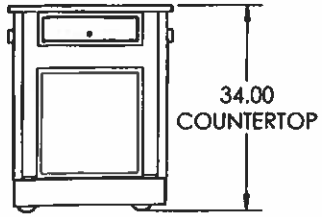

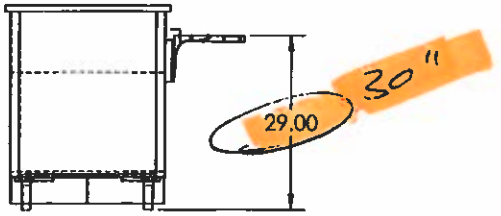

EQUIPMENT 1	EQUIPMENT 2	EQUIPMENT 3	UNIT VOLTS	UNIT AMPS	UNIT PLUG	BASE FINISH	BASE COLOR
CASHIER_OPER	NONE	NONE	120	10	NEMA 5-15P	CUSTOM LAMINATE	

© 2020 The Vollrath Company, L.L.C. All Rights Reserved

THIS DOCUMENT WAS ORIGINALLY CREATED ON A 11" x 17" SIZE SHEET

REVISIONS

NO.	DESCRIPTION	DATE

Navajo Elem School 2 10

PROJECT NUMBER: C-12021

REFERENCE:

DATE: 2/11/2021

SCALE: NTS

DRAWN BY: Navajo Elem School 2 10

SHEET TITLE: VOLLRATH PLAN, FRONT, SIDE

SHEET NUMBER: 1 of 1